Megaswitch E+

You can use Megaswitch E+ for the following switching positions:

HSH5

This is a variation of the HSH4 switching system. The positions 1, 2, 4 and 5 are as usual and in position 3, both Humbuckers are switched parallel. This results in a fuller, louder sound than splitting. A buzz-free sound can be obtained in all positions; the following magnetic polarity is required - NS-S-SN or SN-N-NS. The Megaswitch E+ is ideal for this purpose.

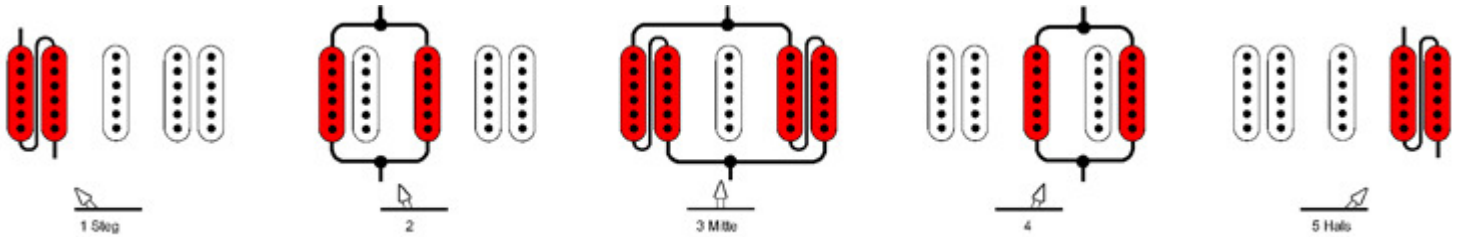

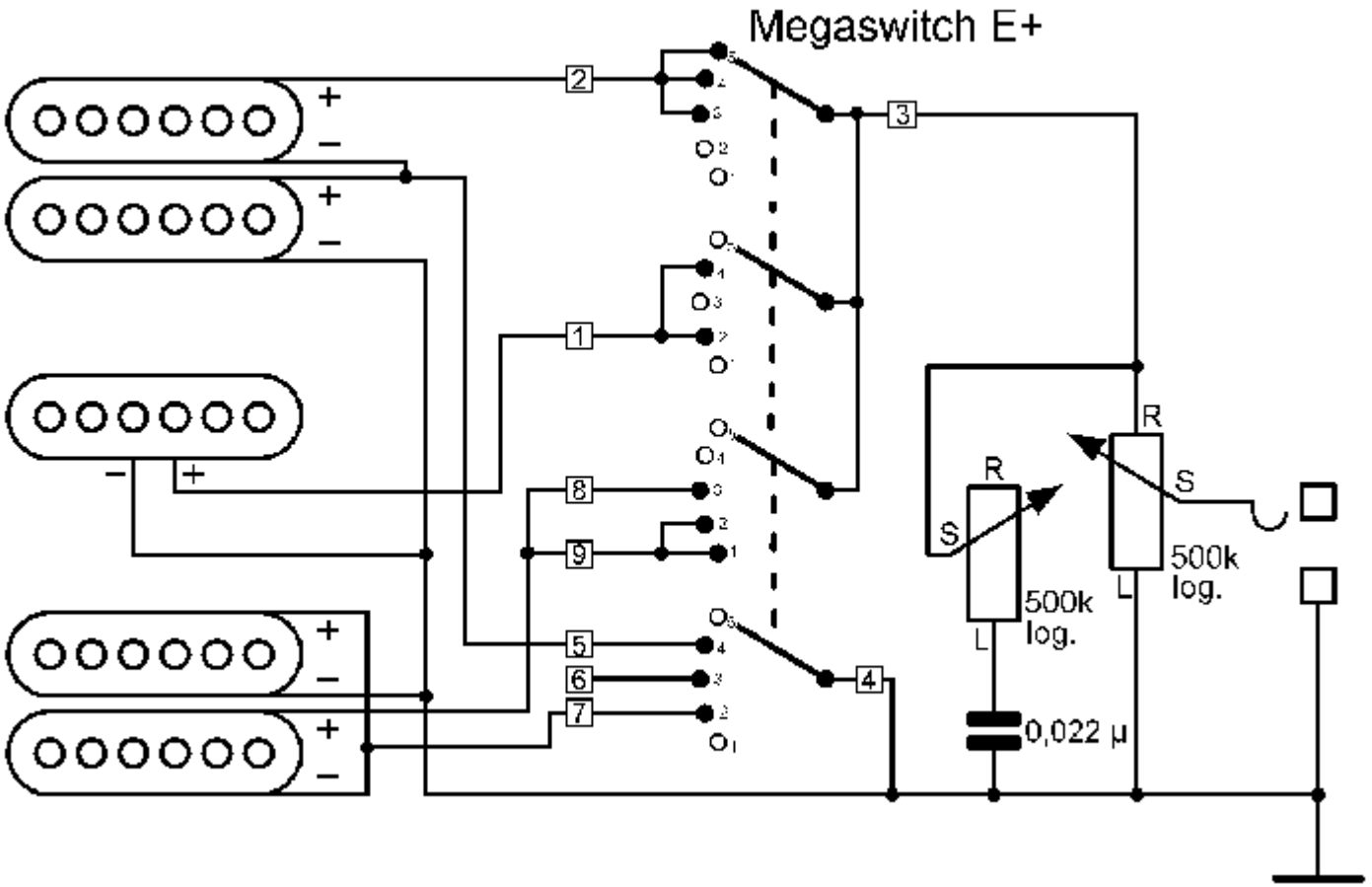
Megaswitch E+
+
–
+
–
+
–
–
+
+
–
+
–
2
1
8
9
5
6
7
3
4
R
S
500k
log.
L
R
S
500k
log.
L
0,022 µ

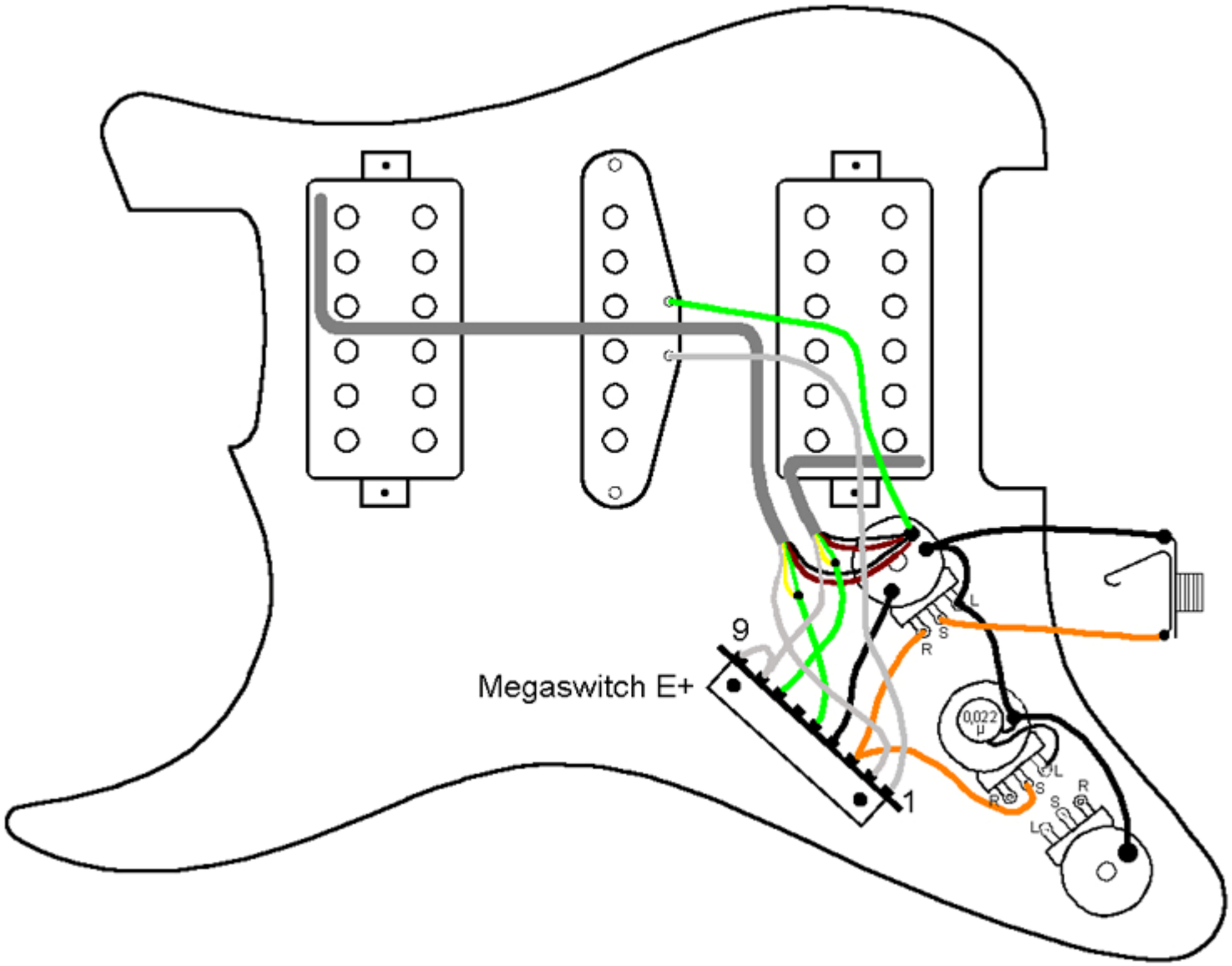
9
Megaswitch E+
1
0,022
µ
L
S
R

HS2

This switching system is for guitars with a Humbucker on the bridge and a single coil on the neck. It allows the humbucker to be split while the outer coil remains active. The inner one is short-circuited . If a buzz-free sound is desired in position 3, the magnetic polarity must be NS-S or SN-N. A Megaswitch E+ is required here.

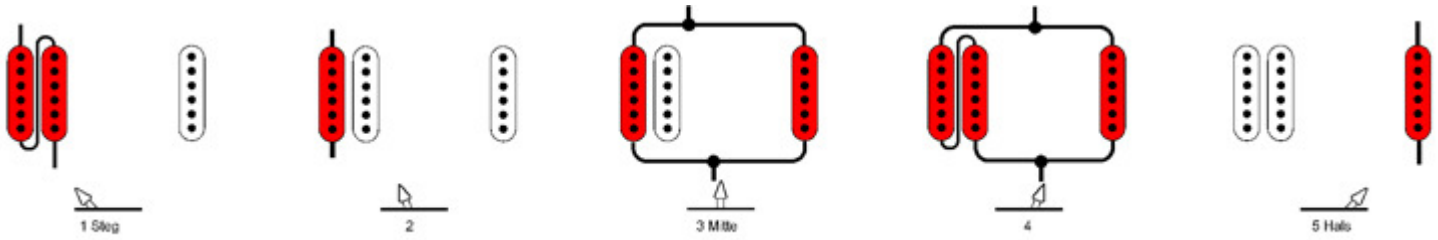

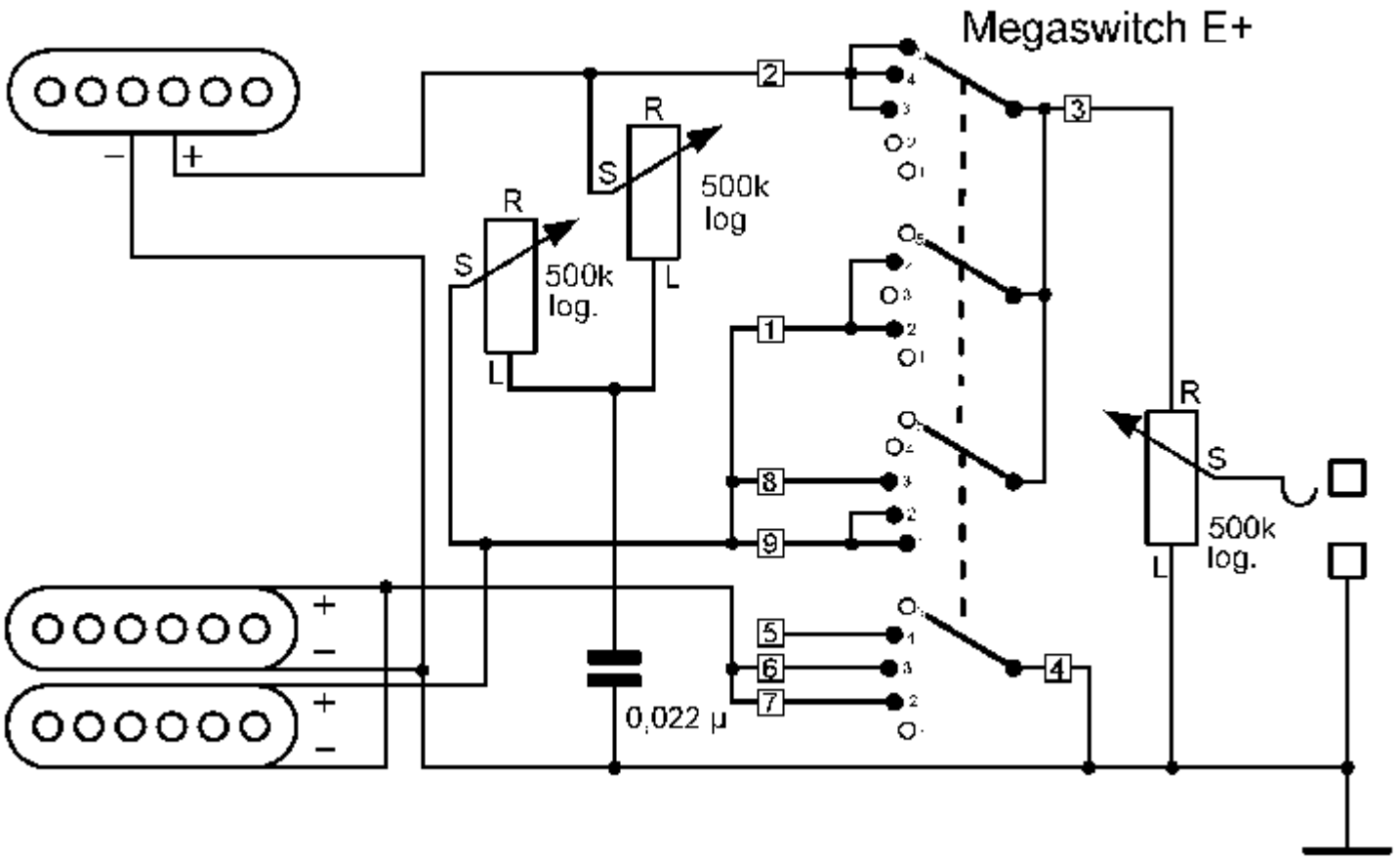

Megaswitch E+
R
S
L
500k
log
500k
log.
500k
log.
0,022 µ
1
2
3
4
5
6
7
8
9

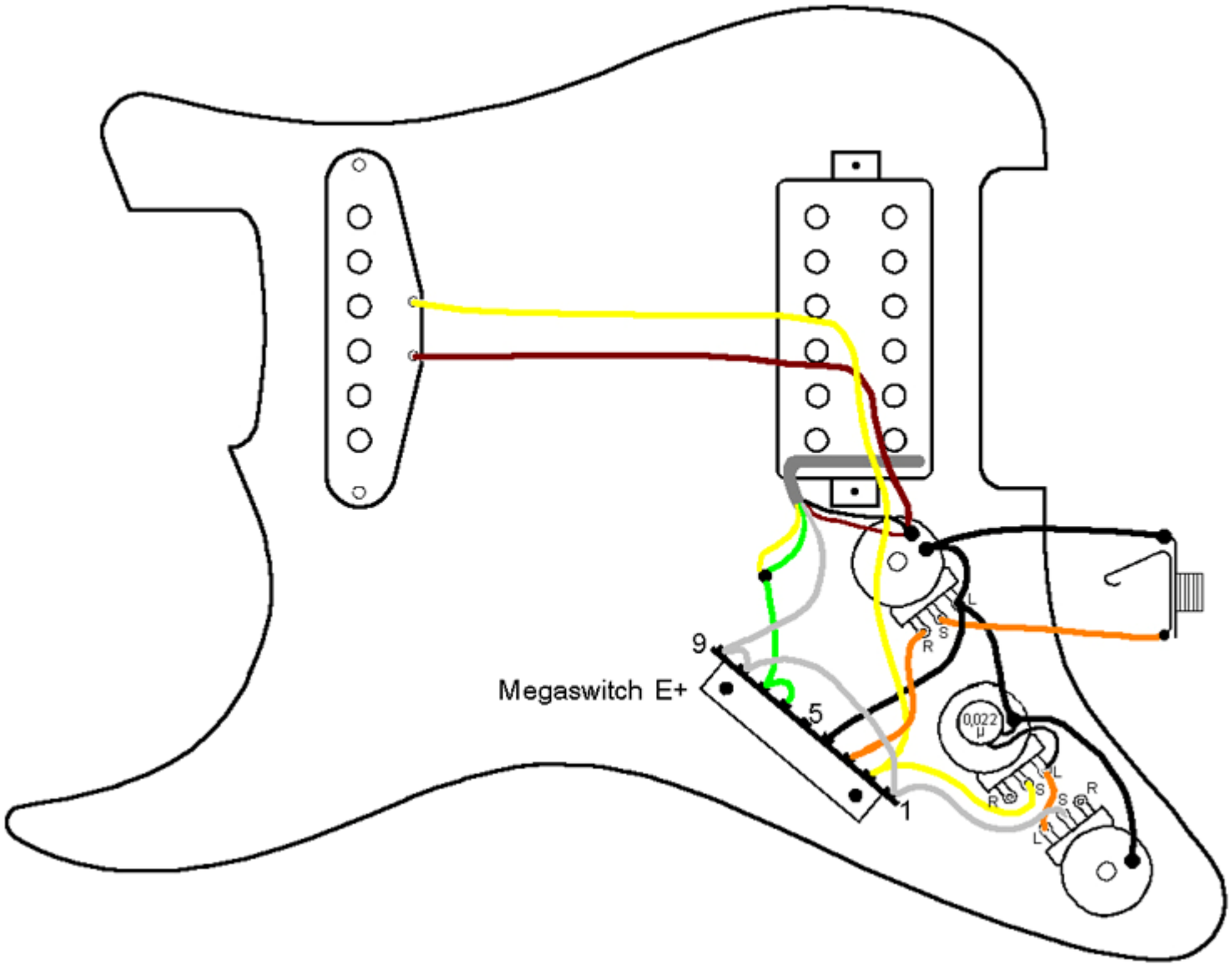
9
Megaswitch E+
5
1
0,022
µ
L
S
R

HS3

This switching system is for guitars with a Humbucker on the bridge and a single coil on the neck and allows the Humbucker to be split while the inner coil remains active. The outer coil is short-circuited. When a buzz-free signal is required in position 3, brummfrei sein soll, the magnetic poliarity must be either NS-N or SN-S. A Megaswitch E+ is required here.

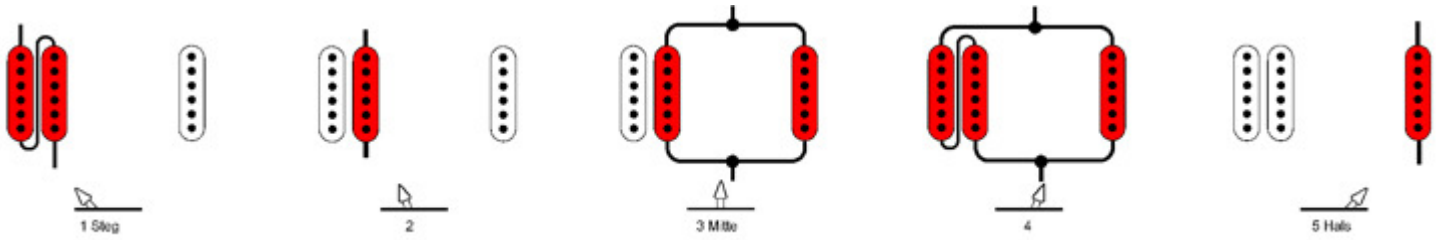

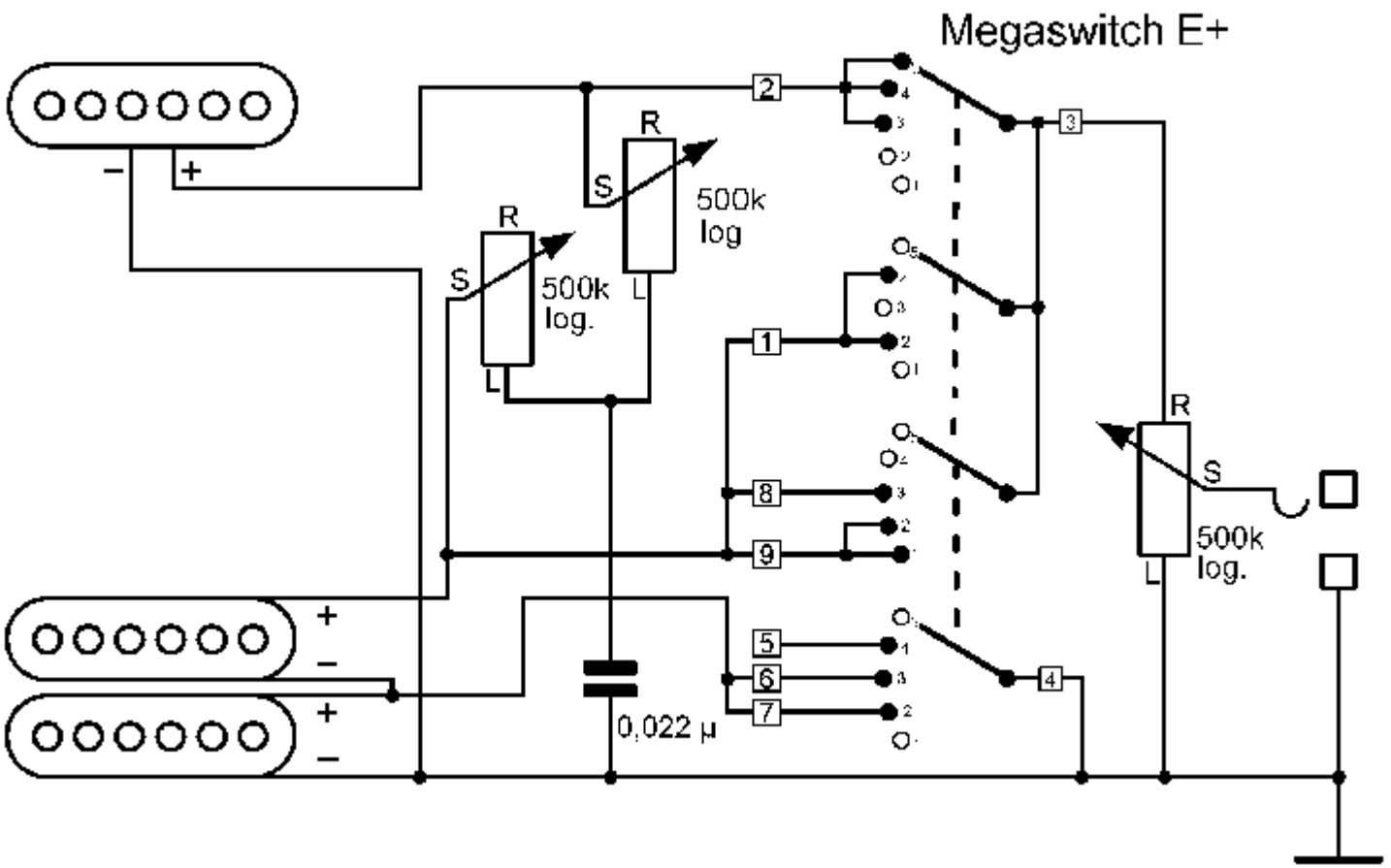
Megaswitch E+
R
S
500k
log
R
S
500k
log.
L
L
R
S
500k
log.
L
0,022 µ
1
2
3
4
5
6
7
8
9
–
+
+
–
+
–

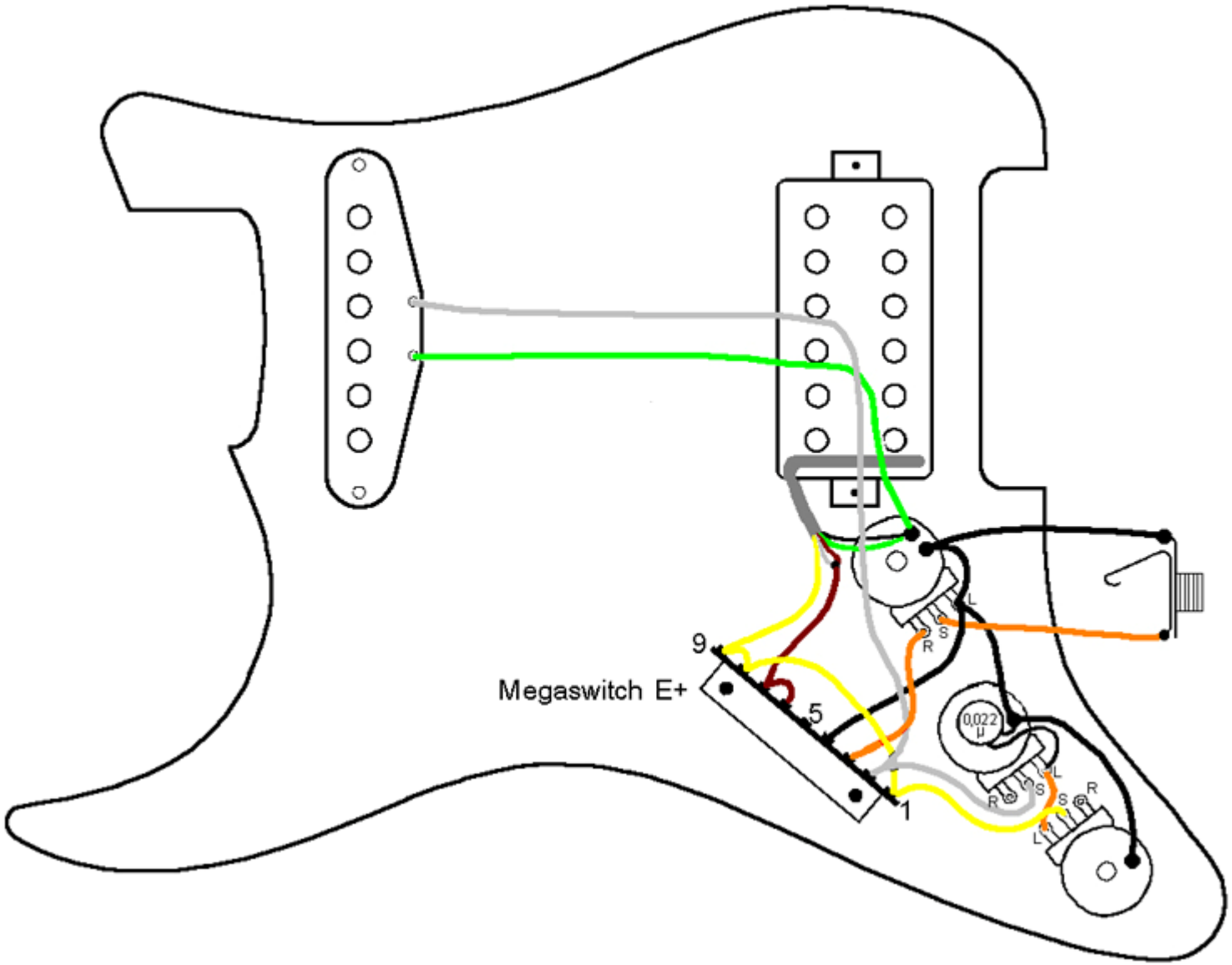
9
Megaswitch E+
5
1
0,022
µ
L
S
R

SH2

This switching system is for guitars with a single coil on the bridge and a Humbucker on the neck. The Humbucker can be split while the outer coil remains active. The inner coil is short-circuited. The Megaswitch E+ is ideal for this purpose. Position 3 is buzz-free when the magnetic polarity is configured as follows: S-SN or N-NS.

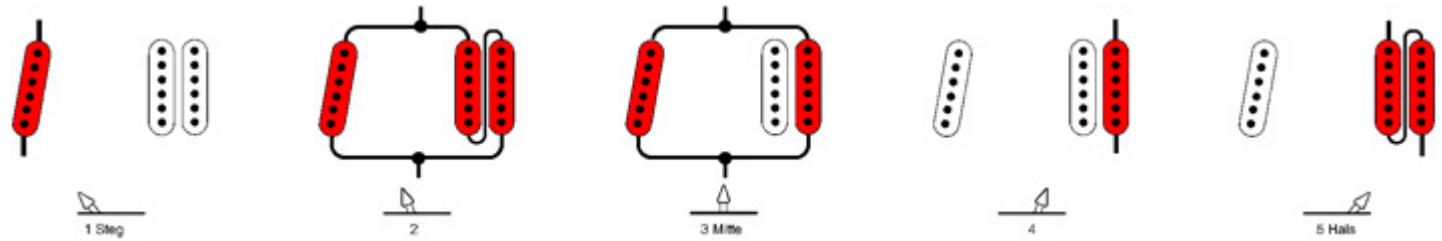

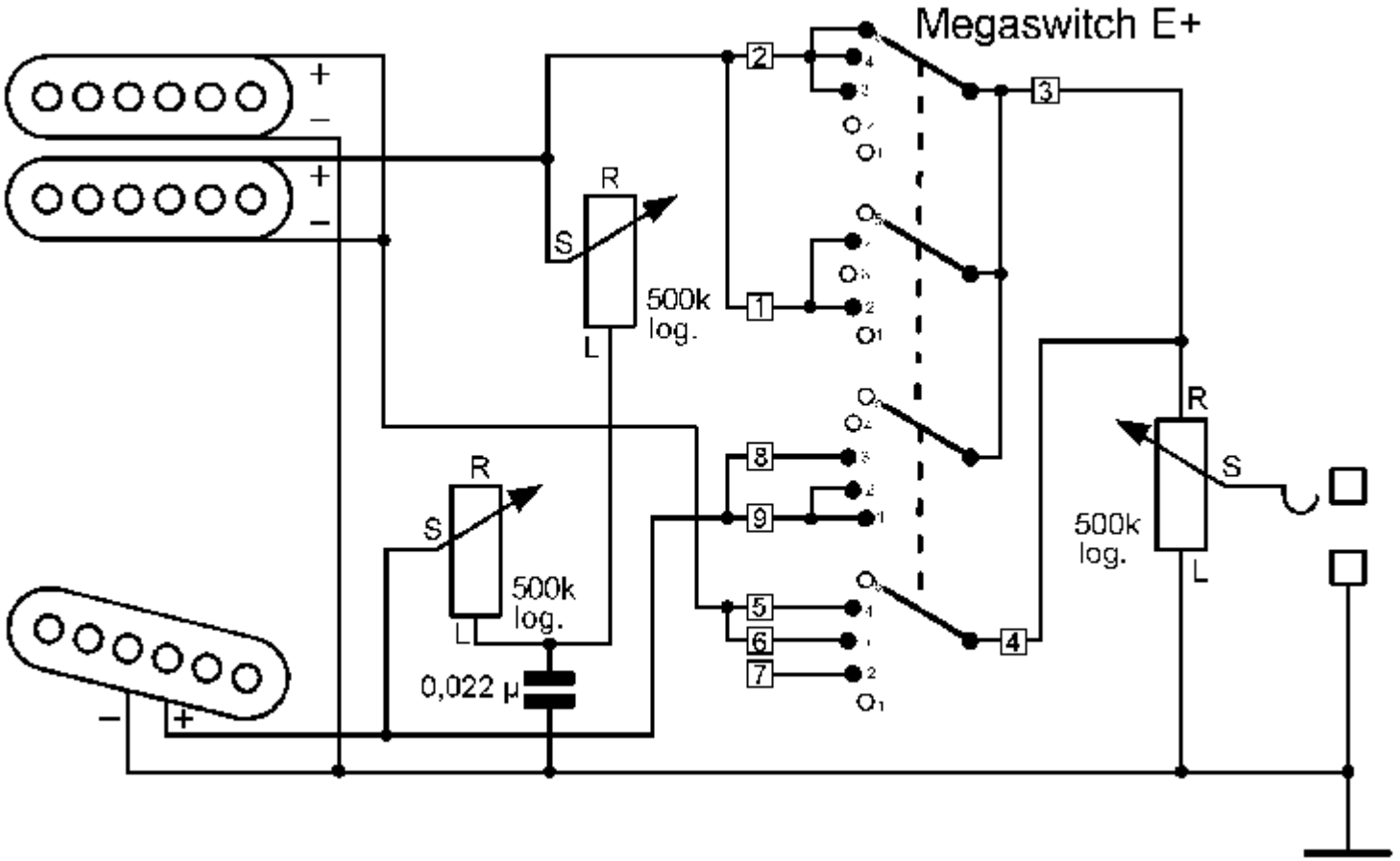
Megaswitch E+
+
–
+
–
R
S
500k
log.
L
R
S
500k
log.
L
0,022 µ
–
+
R
S
500k
log.
L

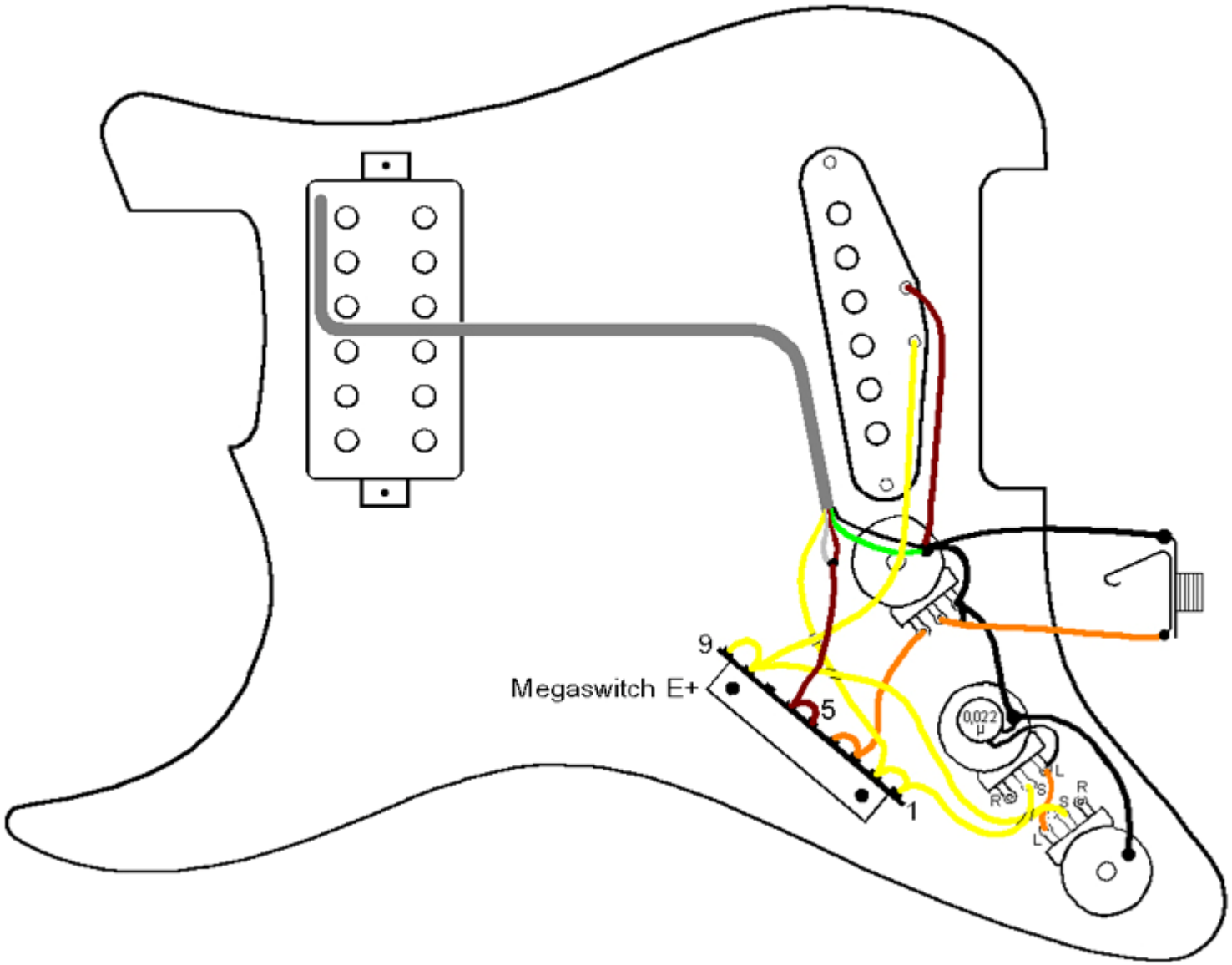
9
Megaswitch E+
5
1
0,022
µ
L
R
S
L
R
S
L

SH3

This switching system is for guitars with a single coil on the bridge and a Humbucker on the neck. The Humbucker can be split while the inner coil remains active. The outer coil is short-circuited. The Megaswitch E+ is ideal for this purpose. Position 3 is buzz-free when the magnetic polarity is configured as follows: N-SN or S-NS.

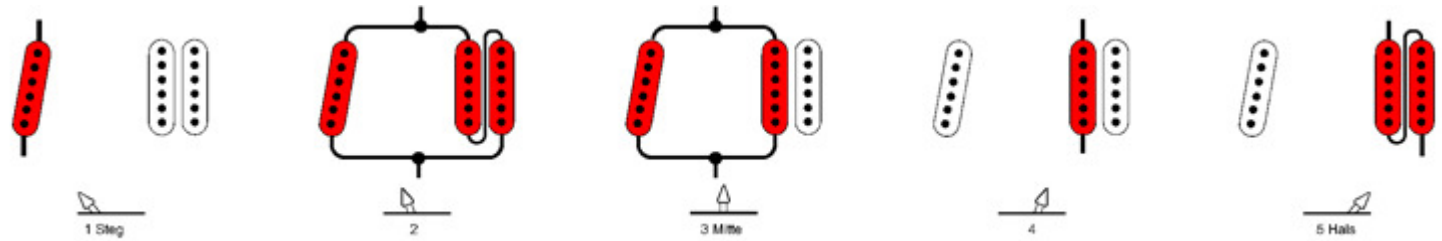

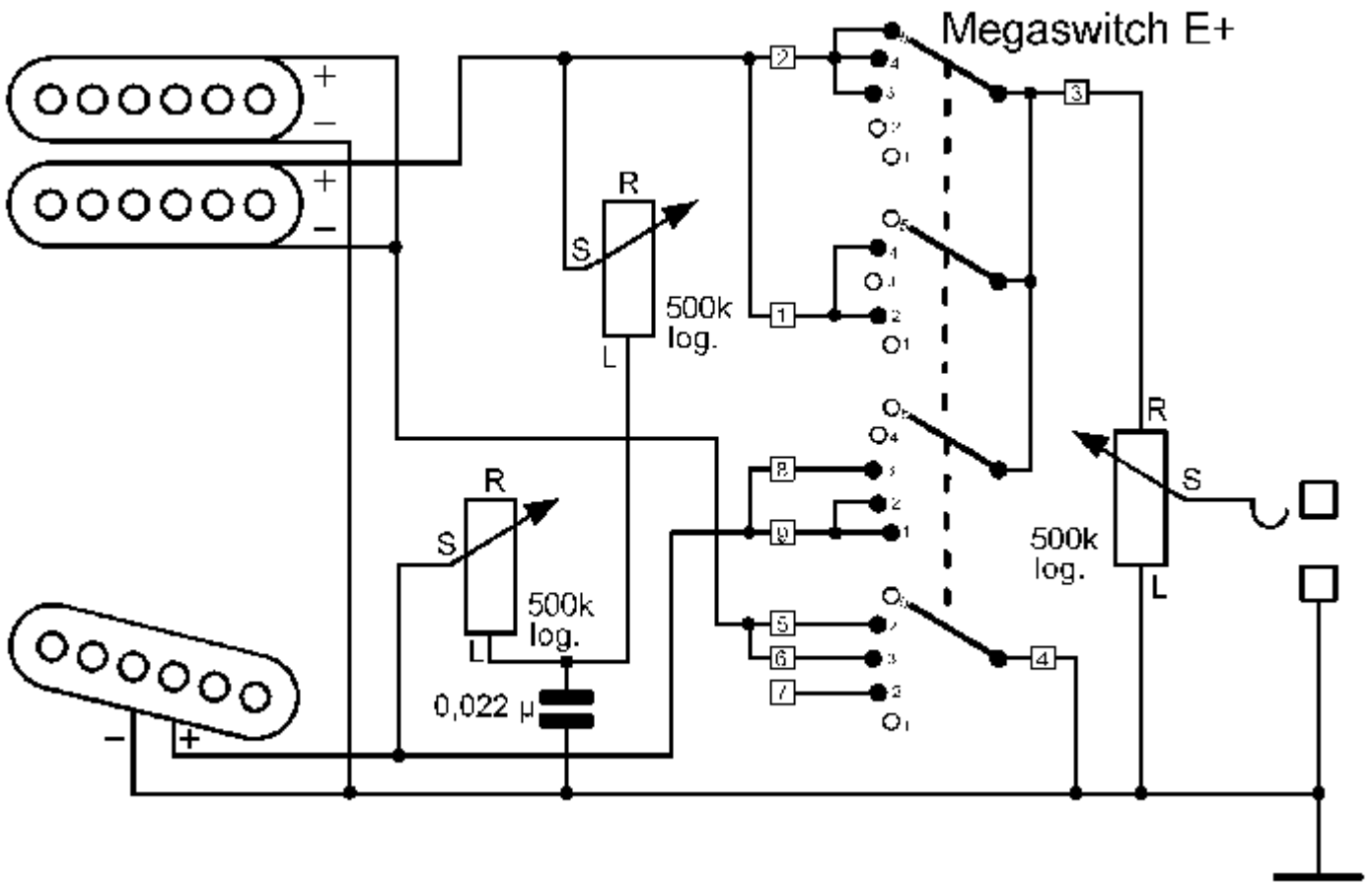
Megaswitch E+
+
–
+
–
R
S
500k
log.
L
R
S
500k
log.
L
0,022 µ
R
S
500k
log.
L
–
+

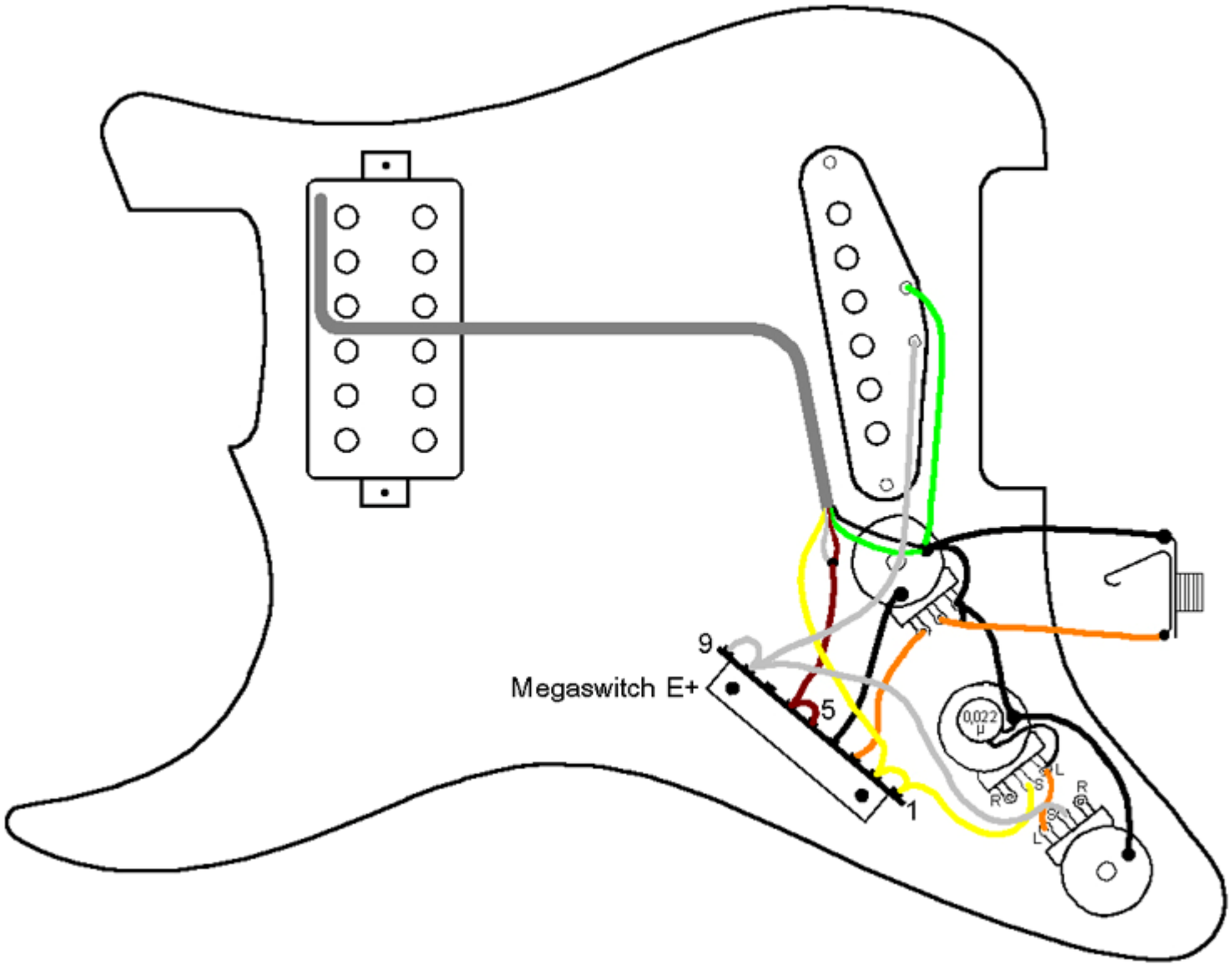
9
Megaswitch E+
5
1
0,022
µ
L
S
R
R
S
L